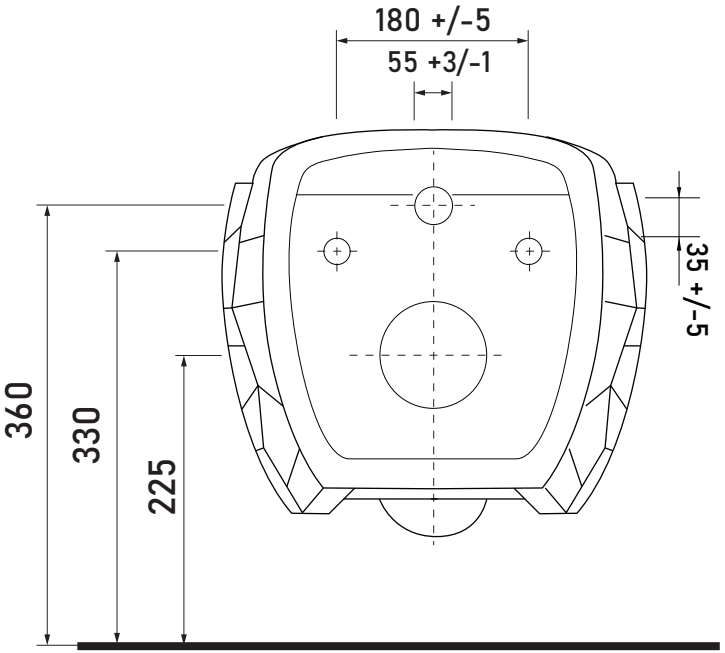

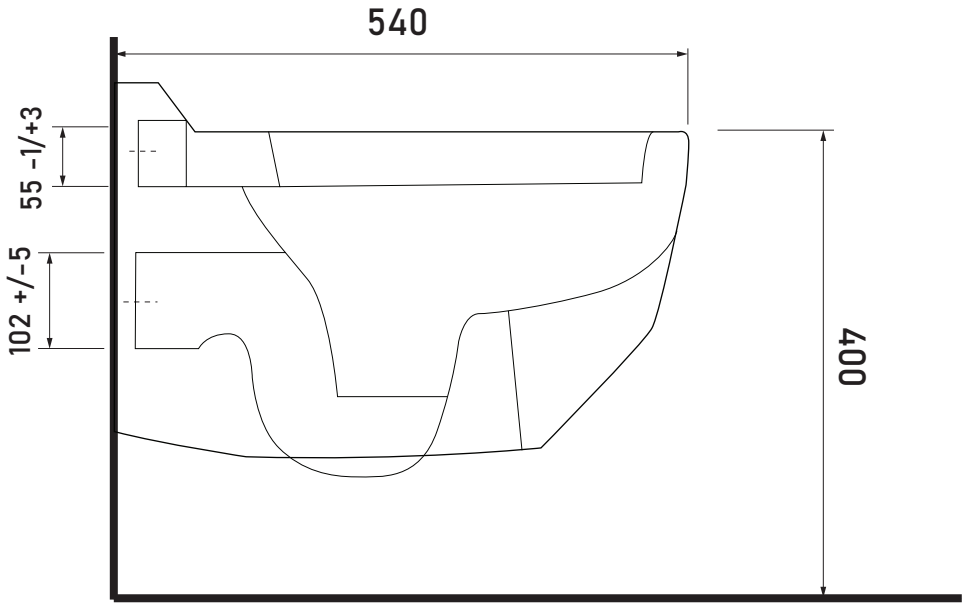

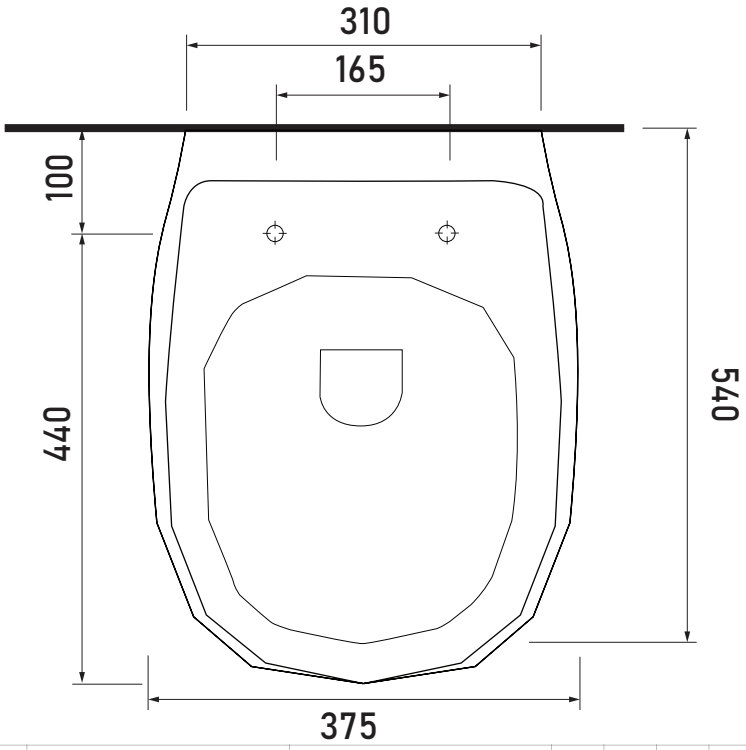

(in mm)

SHEET	SCALE
ASMA WC	
EGE	
DWG NO 87303	