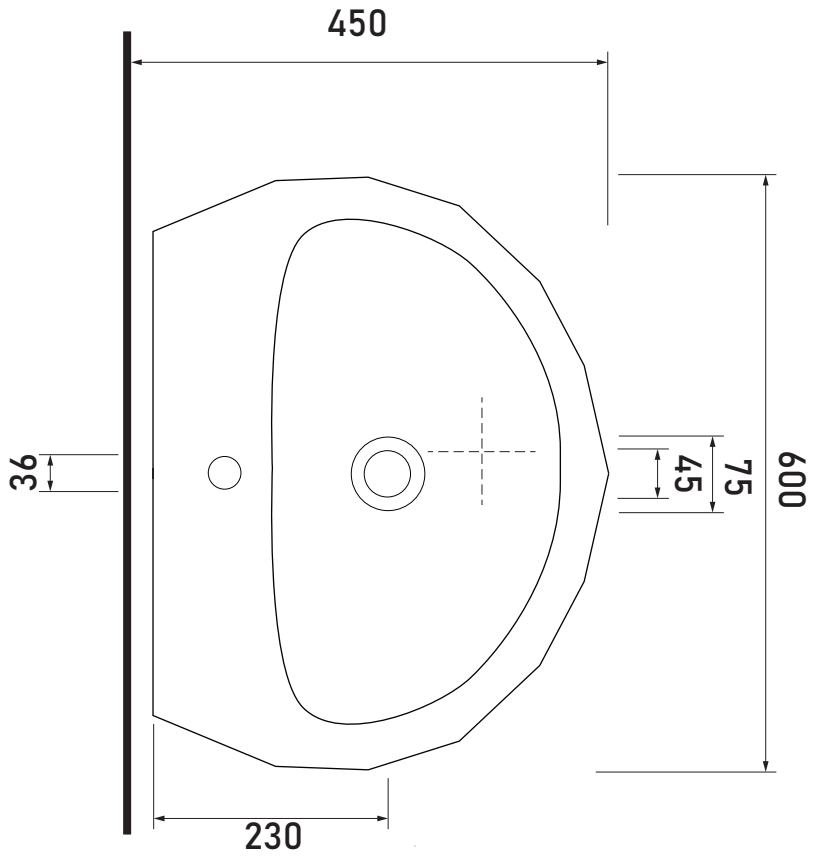

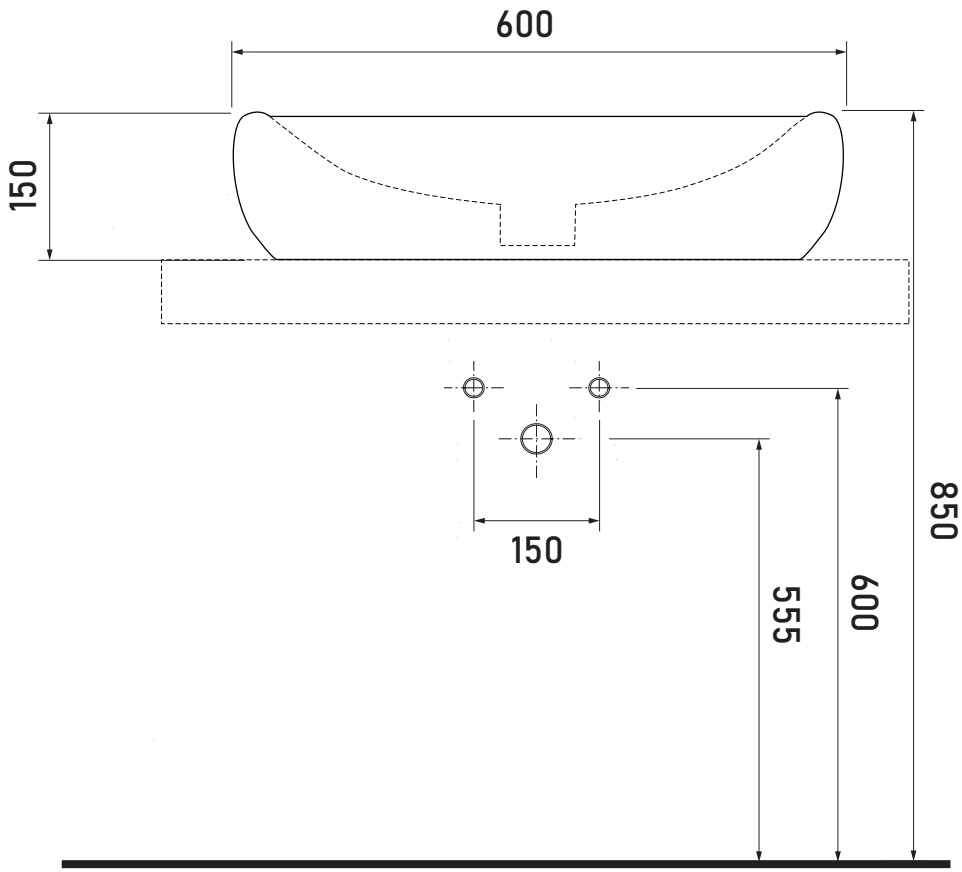

(in mm)

SHEET	SCALE
SURFACE-MOUNTED WASHBASIN	
EGE	
DWG NO 87601	